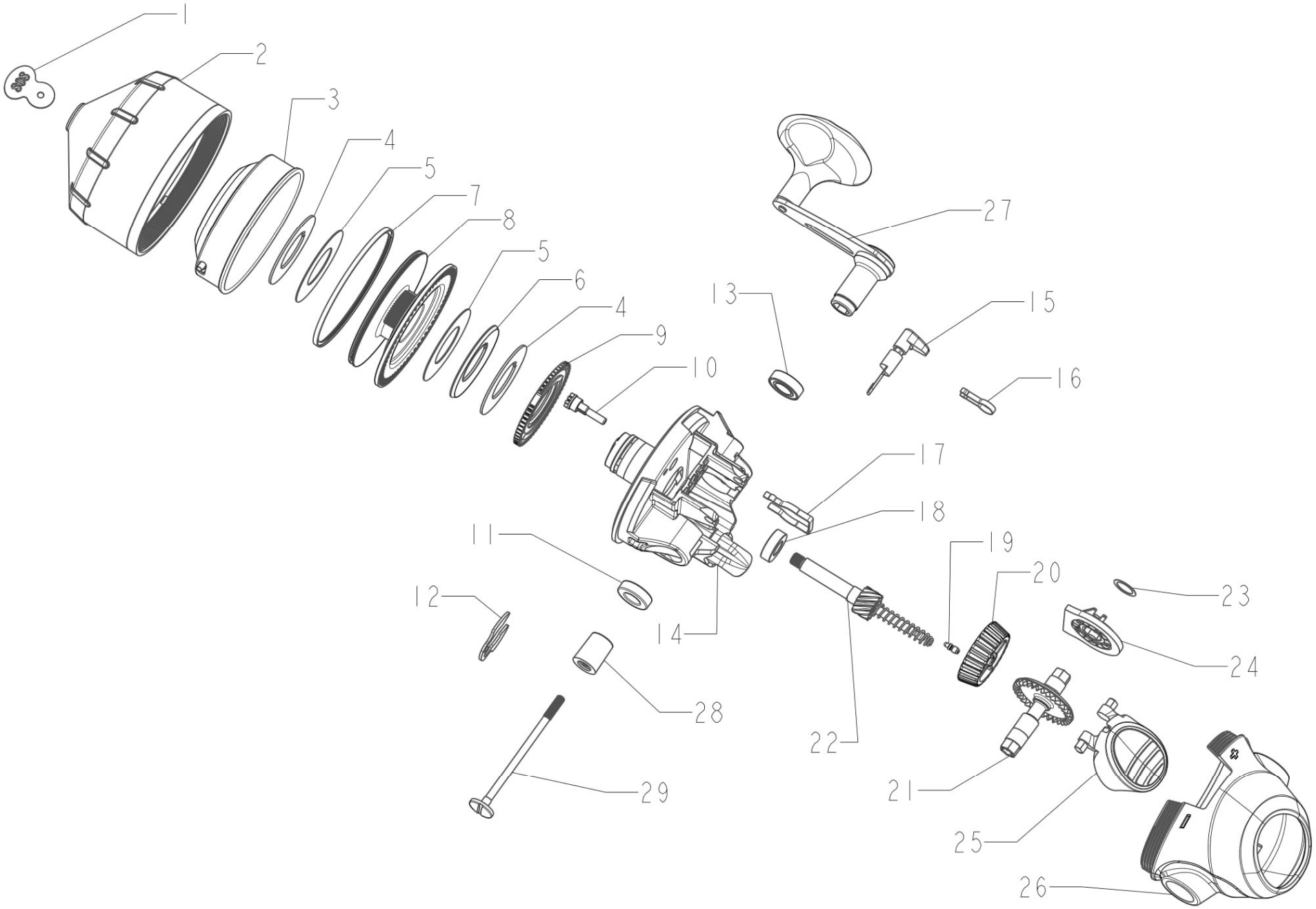

ZEBCO

888 SPINCAST

Zebco 888 Spincast Reel Part List

Key No.	Description	Model 888J	Qty	Key No.	Description	Model 888J	Qty
1	Line Clip	UZ080-01	1	17	Clip,Bearing/Bushing	JAC029-01	1
2	Front Cover Assembly	SAJ324-02	1	18	Bearing	UX028-01	1
3	Spinner Head Assembly	JAC310-03	1	19	Clicker System	XN364-01	1
4	Keyed Drag Washer	UZ040-01	2	20	Drag Adj. Wheel	JAC032-01	1
5	Drag Washer	UZ108-01	2	21	Drive Gear	LAC012-01	1
6	Tapered Drag Washer	UZ106-01	1	22	Center Shaft Assembly	JAC315-02	1
7	T Ring	JAC105-01	1	23	Gear Shim Washer	HRS60	1
8	Spool with Line	JAC321-04	1	24	One way clutch	JAC335-01	1
9	Drag Cam	UZ027-01	1	25	Thumb Button	RAJ309-01	1
10	Drag Pinion	UZ054-01	1	26	Back Cover	JAC023-08	1
11	Bushing	UZ026-01	1	27	Crank Rod Handle Assembly	RAJ418-03	1
12	Spool Clip	UZ034-01	1	28	Crank Rod Spacer	JAC107-01	1
13	Bearing	CP058-01	1	29	Crank Rod	JAC067-02	1
14	Body	JAC301-01	1				
15	Bait Alert Switch	LAC002-01	1				
16	Clip,A/R Switch	JAC033-01	1				